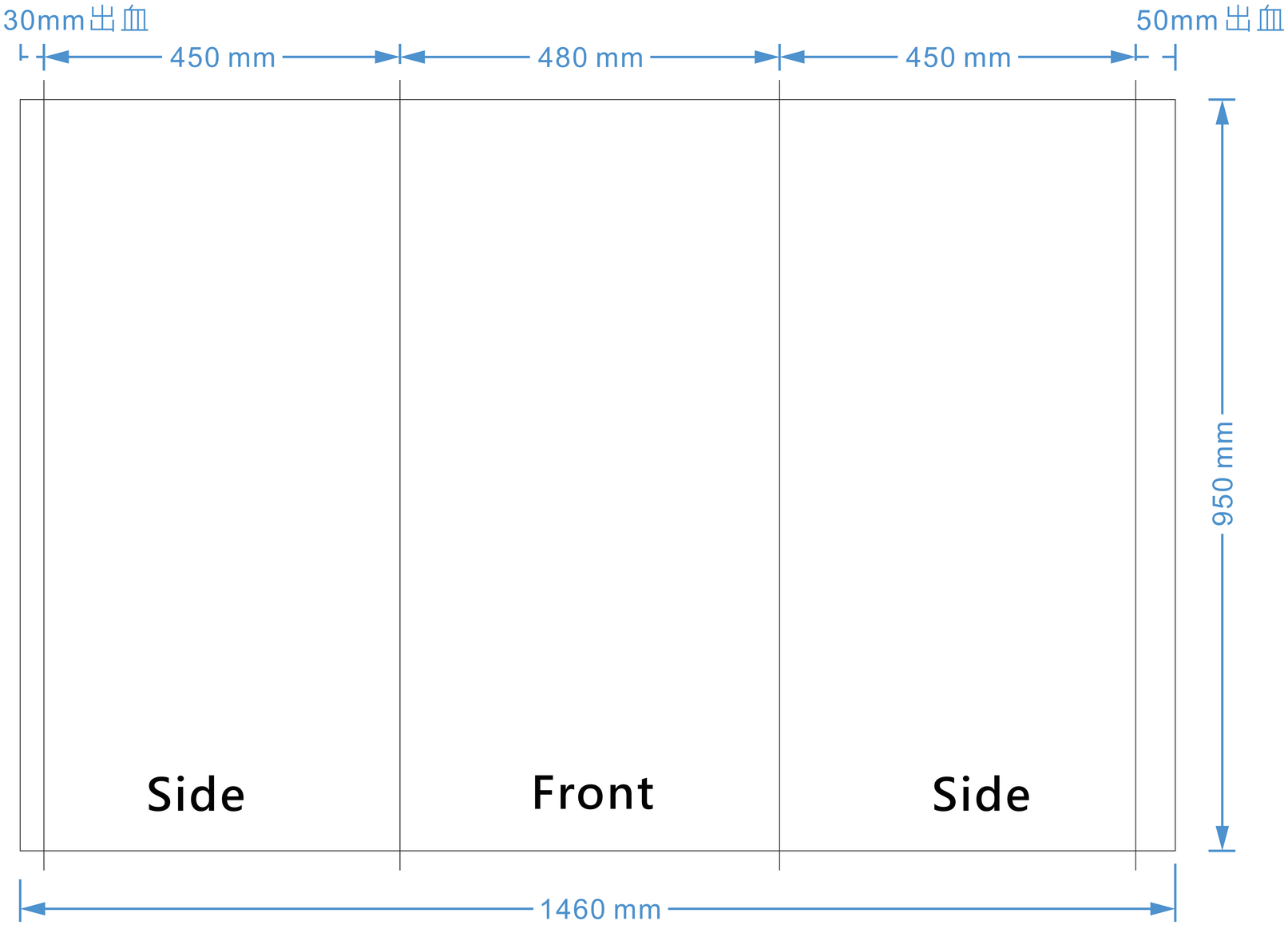
30mm出血
450 mm
480 mm
450 mm
50mm出血
950 mm
Side
Front
Side
1460 mm

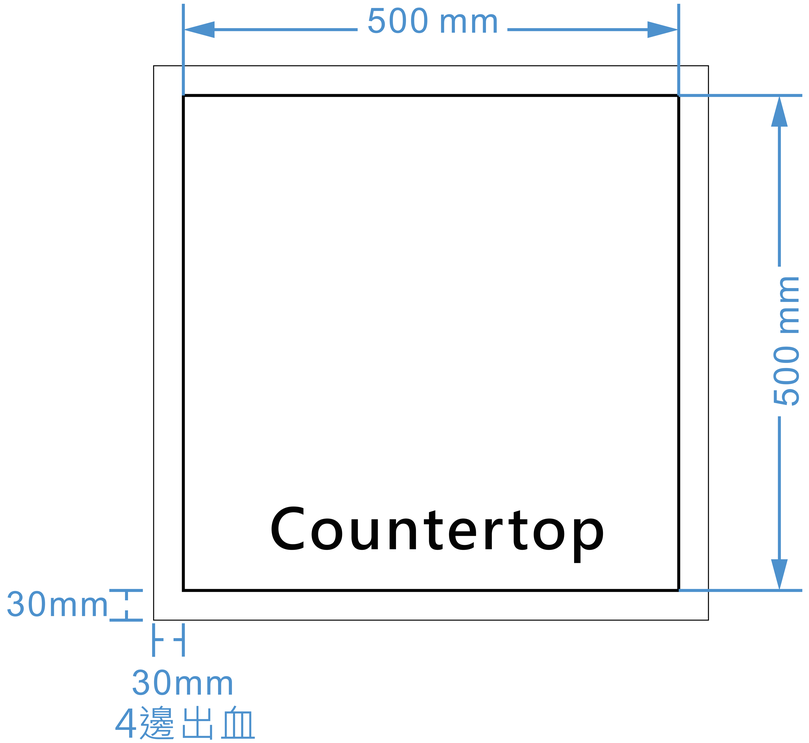
500 mm
500 mm
Countertop
30mm
30mm
4邊出血